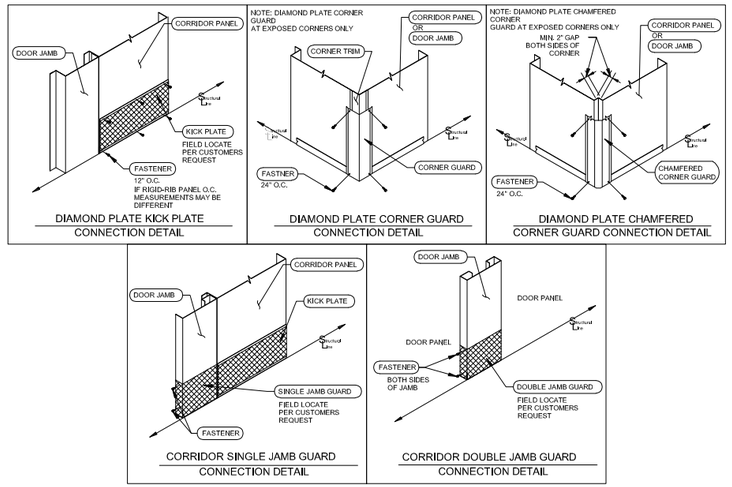

DIAMOND PLATE OPTIONS

(WALL CONSTRUCTION MAY VARY)

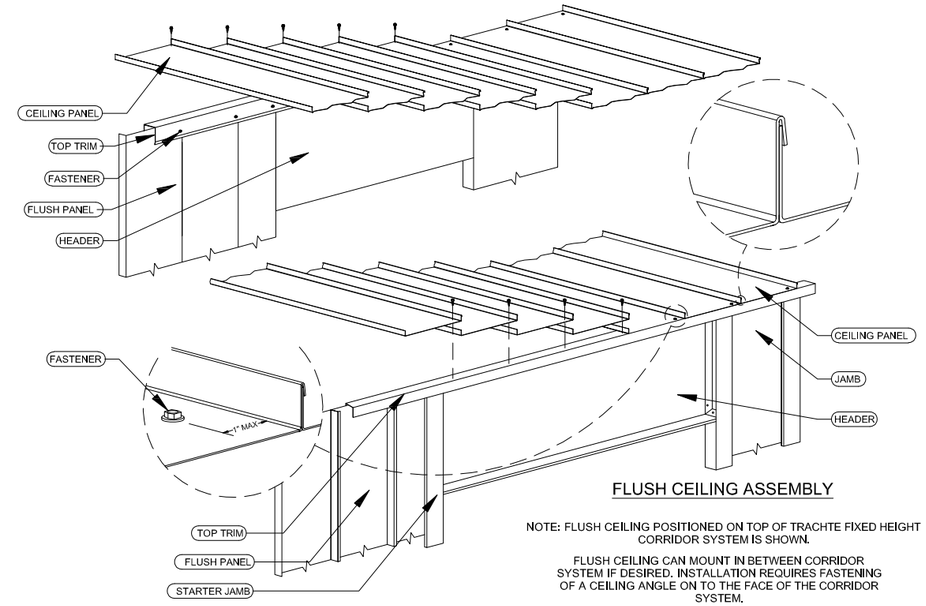

FLUSH CEILING ASSEMBLY

NOTE: FLUSH CEILING POSITIONED ON TOP OF TRACHTE FIXED HEIGHT CORRIDOR SYSTEM IS SHOWN.

FLUSH CEILING CAN MOUNT IN BETWEEN CORRIDOR SYSTEM IF DESIRED. INSTALLATION REQUIRES FASTENING OF A CEILING ANGLE ON TO THE FACE OF THE CORRIDOR SYSTEM.

TYPICAL CORRIDOR FLUSH CEILING PANEL OPTION DETAIL

(WALL CONSTRUCTION MAY VARY)

(Hallway ceiling installation may affect sprinkler installation/coverage)

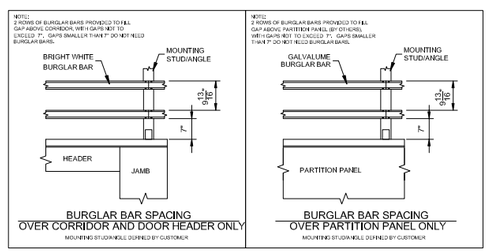

BURGLAR BAR OPTIONS

(WALL CONSTRUCTION MAY VARY)

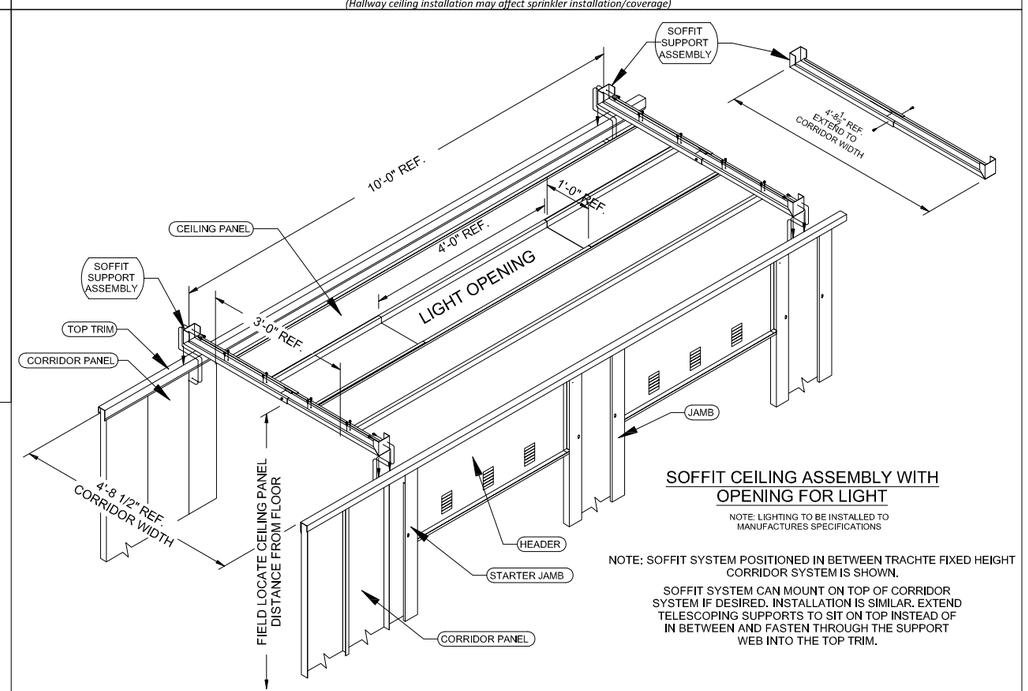

SOFFIT CEILING ASSEMBLY WITH OPENING FOR LIGHT

NOTE: LIGHTING TO BE INSTALLED TO MANUFACTURES SPECIFICATIONS

NOTE: SOFFIT SYSTEM POSITIONED IN BETWEEN TRACHTE FIXED HEIGHT CORRIDOR SYSTEM IS SHOWN.

SOFFIT SYSTEM CAN MOUNT ON TOP OF CORRIDOR SYSTEM IF DESIRED. INSTALLATION IS SIMILAR. EXTEND TELESCOPING SUPPORTS TO SIT ON TOP INSTEAD OF IN BETWEEN AND FASTEN THROUGH THE SUPPORT WEB INTO THE TOP TRIM.

TYPICAL CORRIDOR SOFFIT CEILING PANEL OPTION DETAIL

(WALL CONSTRUCTION MAY VARY)

Revision	By Date

TRACHTE BUILDING SYSTEMS, Inc.

This drawing and all parts thereof is the exclusive property of Trachte Building Systems, Inc., 314 Wilburn Road, Sun Prairie, Wisconsin and may not be reproduced in whole or part without written permission.

TBS TRACHTE Building Systems

Trac-Rite®

Trachte Building Systems
-
314 Wilburn Road
Sun Prairie, WI, 53590

TRACHTE CONVERSIONSYSTEM ACCESSORIES

02/23/2024

ELZ

1:1

-

-

A3.0